iSpring Water Systems

iSpring Shower Filter User Guide and Manual

Ver. 01/2021

Fits SF series (SF1, SF2, SF3 and SF4)

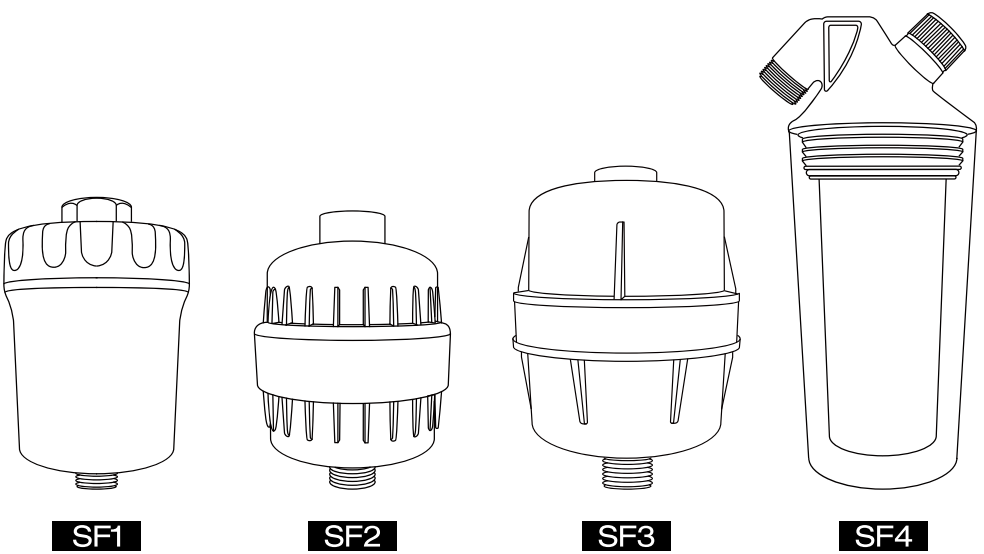

Copyright ©2005-2021 ISPRING WATER SYSTEMS, LLC. All rights reserved.

SHOWER FILTER INSTALLATION INSTRUCTIONS

WHAT'S THIS FOR?

These instructions tell you how to quickly install and start enjoying your new shower filter.

The shower filter installs quickly and easily on any standard ½" threaded connection (the universal size in North America and Europe). For best results, keep water temperature between 40-175°F (or 4-80°C).

TOOLS REQUIRED:

- Teflon Tape (included)
- Wrench (optional)

STEP 1: FLUSH SHOWER FILTER

Hold the shower filter under a faucet and turn the water on to flush out excess carbon particles from the filter. This may turn the water grey for the first few seconds. Keep flushing the filter for 20 seconds. Turn the shower filter over and flush the other direction.

STEP 2: REMOVE EXISTING SHOWER HEAD

Remove the existing shower head from the shower arm by turning counterclockwise. This can usually be done by hand, but you may need a wrench if your old shower head is on too tight. Use your fingers to peel away the old Teflon tape and clean the threaded pipe.

STEP 3: WRAP NEW TEFLON TAPE

Wrap the included Teflon tape tightly around the threads of your shower filter and the shower arm. 5-8 full turns around the threads is sufficient to provide coverage. (There is no need to use the small, white rubber o-rings that came with the filter. The Teflon tape alone is sufficient.)

STEP 4: TWIST ON SHOWER FILTER AND HEAD

Place the new shower filter on the shower arm and turn clockwise to tighten by hand.

Then twist on your shower head and also tighten by turning clockwise. If additional tightening is needed, use a soft cloth to protect the finish and tighten with a wrench. Then enjoy!

FILTER CARTRIDGE REPLACEMENT INSTRUCTIONS

WHAT'S THIS FOR?
These instructions tell you how to change out the filter cartridge for your shower filter.
Cartridge life depends on the filter style. High Output Luxury Shower Filters last for 12,000 gallons (about 6 months). One-year Universal Shower Filters last for 25,000 gallons (about 12 months).

TOOLS REQUIRED:
- Wrench (optional)

STEP 1: FLUSH SHOWER FILTER CARTRIDGE
Hold the replacement filter cartridge under a faucet and turn the water on to flush out excess carbon particles from the filter. This may turn the water grey for the first few seconds. Keep flushing the filter for 20 seconds. Turn the shower filter over and flush the other direction.

STEP 2: REMOVE SHOWER FILTER
First, remove the shower head from the shower filter by turning counter-clockwise. Next, unscrew the shower filter from the shower arm by also turning counterclockwise. Unscrewing can usually be done by hand, but you may need a wrench if your shower head or filter is on too tight.

STEP 3: SWAP FILTER CARTRIDGES
Open the shower filter by turning the bottom half counterclockwise until it separates from the top half. Remove the old filter cartridge, and put the new filter cartridge in its place. (The cartridge direction does not matter.) Verify the rubber o-rings are in place, and twist the two filter halves back together.

STEP 4: REASSEMBLE SHOWER FILTER
Place the shower filter back on the shower arm and turn clockwise to tighten by hand. Then twist on your shower head and also tighten by turning clockwise. If additional tightening is needed, use a soft cloth to protect the finish and tighten with a wrench. Then enjoy!

Registration is required to activate the 30-day money back and extended manufacturer warranty. Upon installation, please fill out the form at ***123filter.com/warranty***.

We hope that you're delighted with your new iSpring filtration system!

If we can help or provide support in any way, please contact us directly by phone or email.

www.123Filter.com/warranty

678-261-7611
M-F 9-5 EST

Atlanta, GA USA

support@123filter.com

Water's Good™

iSPRING